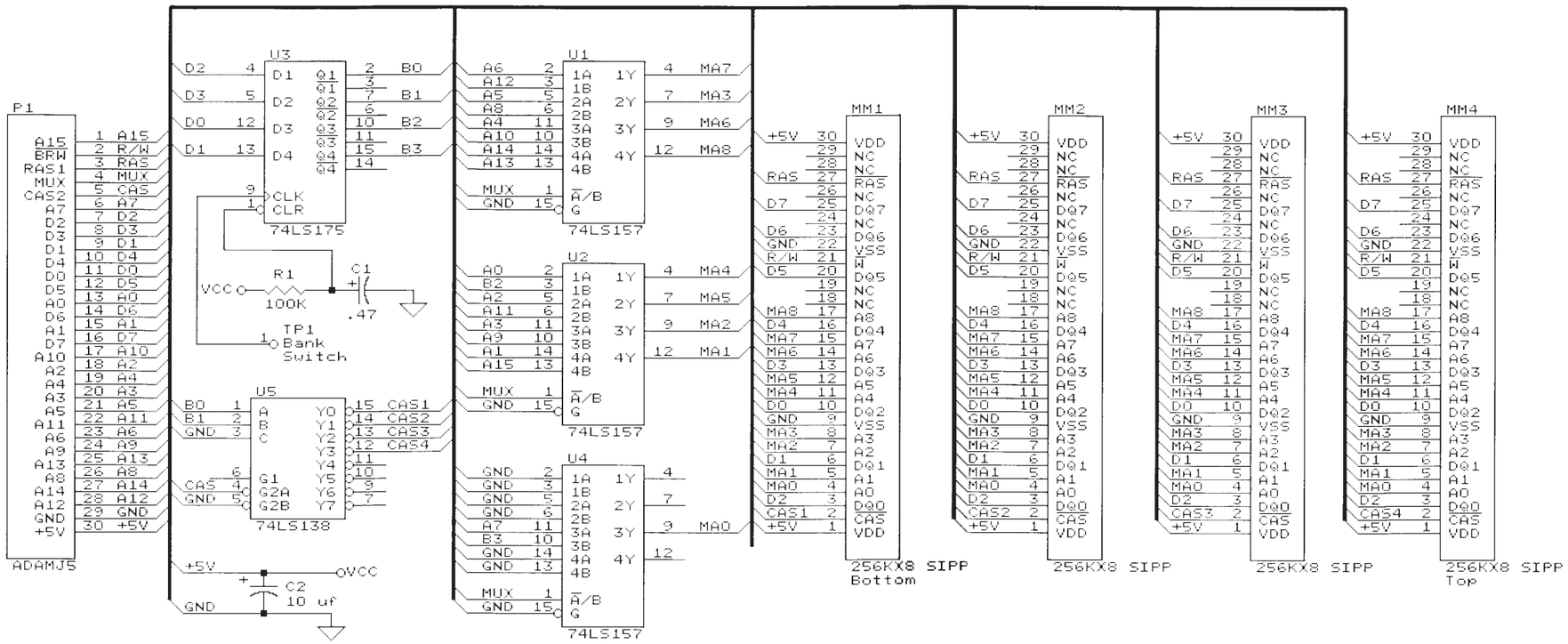

Micro Innovations

12503 King's Lake Drive
Reston, Virginia 22091

Title
1MB Coleco Adam expansion memory board

Size	Document Number	REV
B		5

Date: June 26, 1991 Sheet 1 of 1